Generated by Foxit PDF Creator © Foxit Software
http://www.foxitsoftware.com For evaluation only.
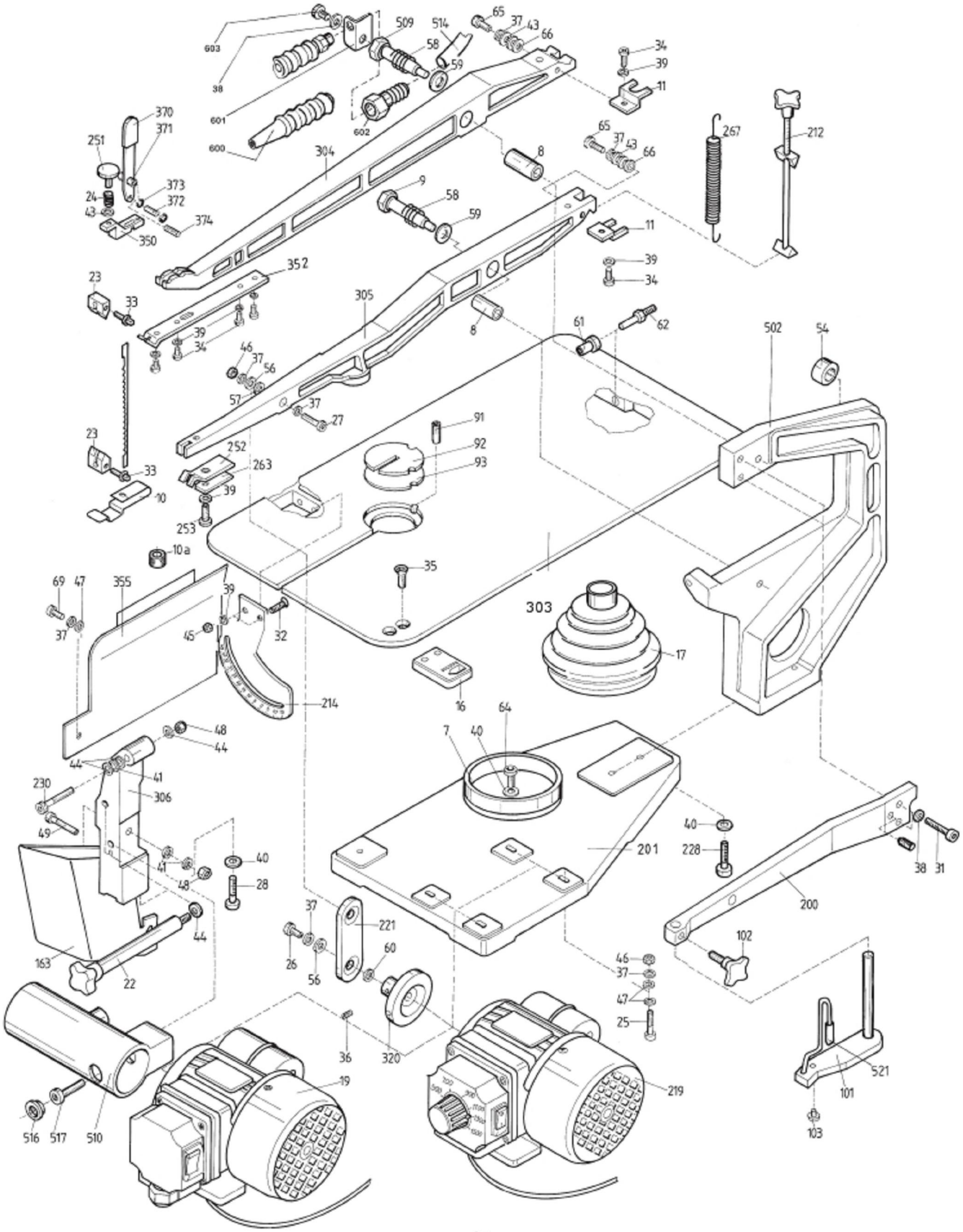
HEGNER Multicut-2S-2SV